F-1000 SERIES
TURBINE FLOW METERS

Bluetooth®

The F-1000 Series family of inline and insertion style turbine flow meters are designed to provide accurate and reliable flow measurement in a variety of applications in the HVAC market.

• Chilled Water • Heating Hot Water • Domestic/Municipal Water • • Clean Process Water •

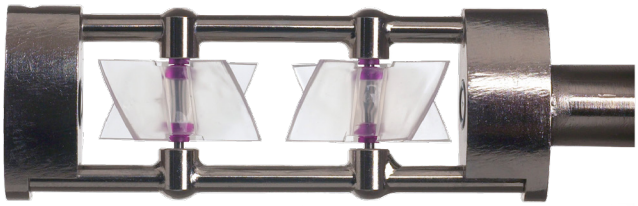

DESCRIPTION

ONICON's F-1000 Series is a family of insertion and inline style turbine flow meters that provide accurate, reliable flow measurement in a variety of applications.

The F-1000 Series flow meters are suitable for use in pipes ranging in size from ¾" to 72" in diameter. Each model utilizes ONICON's patented electronic turbine rotation sensing system and unique low mass turbine design that is accurate over wide flow ranges with excellent low flow measurement capability.

APPLICATIONS

- HVAC hydronic applications including chilled water, heating hot water and water/glycol solutions
- Domestic/municipal water*
- Clean process water*

FEATURES

Unmatched Price vs. Performance
Individually wet-calibrated, highly accurate instrumentation at very competitive prices.

Simplified Hot Tap Insertion Design
This feature allows insertion meters to be removed, by hand, without system shutdown.

Excellent Long Term Reliability
Patented electronic sensing is resistant to scale and particulate matter. Low mass turbines with engineered jewel bearing systems provide a mechanical system that virtually does not wear.

The Dual Turbine Advantage
Dual counter-rotating turbines with mirrored helixes reduce the effects of the most common type of flow distortion, the swirl caused by bends and elbows. This reduces the upstream straight run requirements in some applications.

Programmable with Built-in Diagnostics
The USB interface makes field programming simple. Advanced diagnostics provide real-time data from the meter.

Bluetooth® Connectivity
Optional Bluetooth® interface enables wireless access to real-time data for fast commissioning and advanced diagnositcs.

CALIBRATION

All F-1000 Series flow meters are wet calibrated in a flow laboratory against standards that are directly traceable to National Institute of Standards and Technology (N.I.S.T.). A certificate of calibration accompanies every meter.

*Insertion meters only

SPECIFICATIONS*

MODEL F-11XX AND F-12XX TRANSMITTER		
PERFORMANCE	INSERTION ACCURACY	± 1% of reading from 3 to 30 ft/s (10:1 range) ± 2% of reading from 0.4 to 20 ft/s (50:1 range)
	INLINE ACCURACY	± 2% of reading from 0.8 to 38 GPM (50:1 range)
	MINIMUM CONDUCTIVITY[1]	Default range: 100-5000 µS/cm Extended range as low as 5 µS/cm
INPUT POWER	Input power based on model number	
	F-1XXX-00	24 VAC @ 65 mA, 1.6 VA 24 VDC @ 30 mA, 1 W
	F-1XXX-10	24 VAC @ 115 mA, 2.8 VA 24 VDC @ 60 mA, 1.5 W
	F-1XXX-11	24 VAC @ 150 mA, 3.6 VA 24 VDC @ 75 mA, 2W
I/O SIGNAL**	AVAILABLE OPTIONS	• Frequency output • Scaled pulse (dry contact) output • Analog output • Isolated analog output
	FREQUENCY OUTPUT	0-15V peak pulse, maximum Hz
	SCALED PULSE/ ALARM OUTPUT	Isolated solid state dry contact Contact rating: 100 mA, 50 V Contact duration: Field programmable; 50, 100, 500 or 1000 ms
	ANALOG OUTPUT	Field programmable, 4-20 mA, 0-10 V, or 0-5 V
	ISOLATED ANALOG OUTPUT	Field programmable, 4-20 mA, 0-10 V, or 0-5 V
ELECTRONICS ENCLOSURE**	AVAILABLE OPTIONS	• Default Configuration: Cast aluminum, epoxy coated weathertight NEMA 4 rated enclosure. • Bluetooth Configuration: Cast aluminum, acetal plastic, and epoxy coated weathertight NEMA 4 rated enclosure.
	AMBIENT CONDITIONS	-5°F to 160°F
ELECTRICAL CONNECTIONS**	AVAILABLE OPTIONS	• PVC jacketed cable, pig tail with ½" NPT conduit connection • Plenum rated cable with indoor DIN connector • Shortened PVC jacket cable with Deutsch Connector
BLUETOOTH®	VERSION	Bluetooth v5.1, Low Energy (BLE)
	MODE	Single
	CONNECTIVITY RANGE	Up to 50 ft

[1] Conductivity can be lower depending on application criteria . Contact factory for application assistance.

*Specifications subject to change without notice.
**See model codification for additional information regarding option selections.

SPECIFICATIONS CONTINUED*

MODEL F-11XX AND F-12XX SENSOR		
PERFORMANCE	SENSING METHOD	Electronic impedance sensing (non-magnetic and non-photoelectric)
	ACCURACY	± 0.5% of reading at calibrated velocity
OPERATING CONDITIONS	FLUID TEMPERATURE	Low temp: -20°F to 150°F continuous High temp: 150°F to 280°F continuous, 300°F peak[2]
	MAXIMUM OPERATING PRESSURE	400 psi maximum
	INSERTION PRESSURE DROP	Less than 0.16 psi at 8 ft/s, decreasing in larger pipes and lower velocities
	INLINE PRESSURE DROP	0.48 psi at maximum flow rate
CONSTRUCTION MATERIALS**	AVAILABLE OPTIONS	• Electroless nickel plated brass • 316 stainless steel - The use of 316 Stainless Steel is required for non-metallic pipe, condensate, hot water over 250°F, and NSF-potable water. • Bronze body[3]
PIPE SIZE RANGE	INSERTION	1¼ - 72" nominal diameter (1" available with ONICON copper tee)
	INLINE	Threaded or sweat union fittings - ¾" or 1" nominal diameter
PROCESS CONNECTIONS	INSERTION	1" NPT adapter
	INLINE	Coupling adapters based on pipe material
APPROVAL	SAFE DRINKING WATER	NSF/ANSI 61
	LEAD CONTENT VERIFICATION	NSF/ANSI 372

OPERATING RANGE FOR COMMON PIPE SIZES
(±2% accuracy begins at 0.4 ft/s)

PIPE SIZE (inches)	FLOW RATE (GPM) (0.1 ft/s to 20 ft/s)	PIPE SIZE (inches)	FLOW RATE (GPM) (0.1 ft/s to 20 ft/s)	PIPE SIZE (inches)	FLOW RATE (GPM) (0.1 ft/s to 20 ft/s)
¾	0.4 - 38	4	8 - 800	18	120 - 14,600
1	0.4 - 38	6	15 - 1,800	20	150 - 18,100
1¼	0.8 - 95	8	26 - 3,100	24	230 - 26,500
1½	1 - 130	10	42 - 4,900	30	360 - 41,900
2	2 - 210	12	60 - 7,050	36	510 - 60,900
2½	2.5 - 230	14	72 - 8,600		
3	4 - 460	16	98 - 11,400		

[2] Insertion meters operating at or above 250°F require 316 SS construction option.
[3] Inline meters only
*Specifications subject to change without notice.
**See model codification for additional information regarding option selections.

TYPICAL INSTALLATION

Insertion Style Turbine Meter

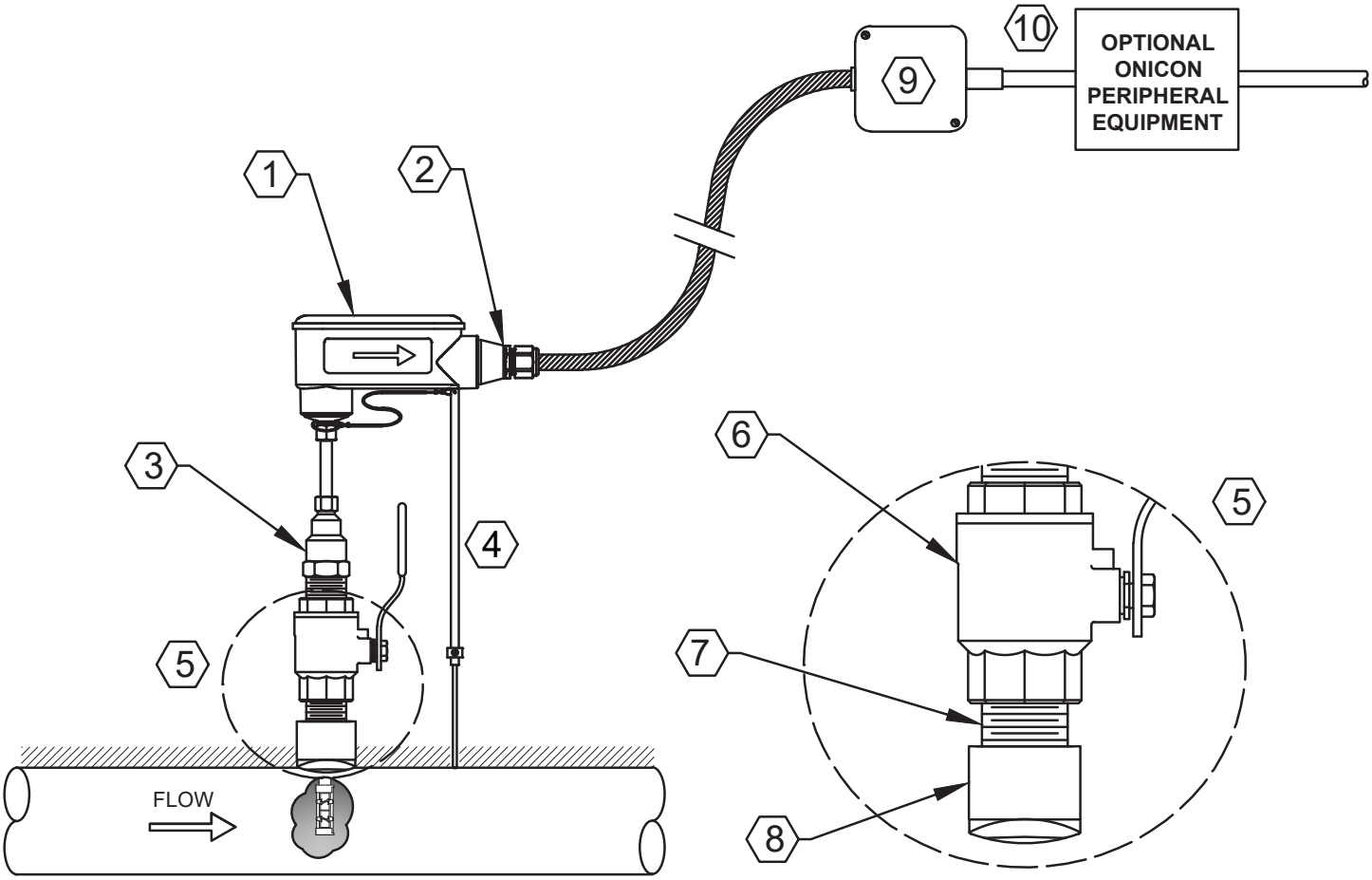

1. Electronics enclosure with flow direction indicator
2. ½″ FNPT conduit connection
3. Hot tap adapter
4. Depth gauge
5. Typical installation kit for steel pipe
6. Full port isolation valve, 1″ NPT minimum (1¼″ NPT minimum required for Hot Tap installations)
7. Threaded close nipple, 1″ NPT minimum (1¼″ NPT minimum required for Hot Tap installations)
8. Welded branch outlet, 1″ NPT minimum (1¼″ NPT minimum required for Hot Tap installations)
9. Connect factory wires to field wires in appropriate junction box
10. Flow meter output signals provided for connection to control system or ONICON peripheral equipment.

TYPICAL INSTALLATION (CONTINUED)

Inline Style Turbine Meter

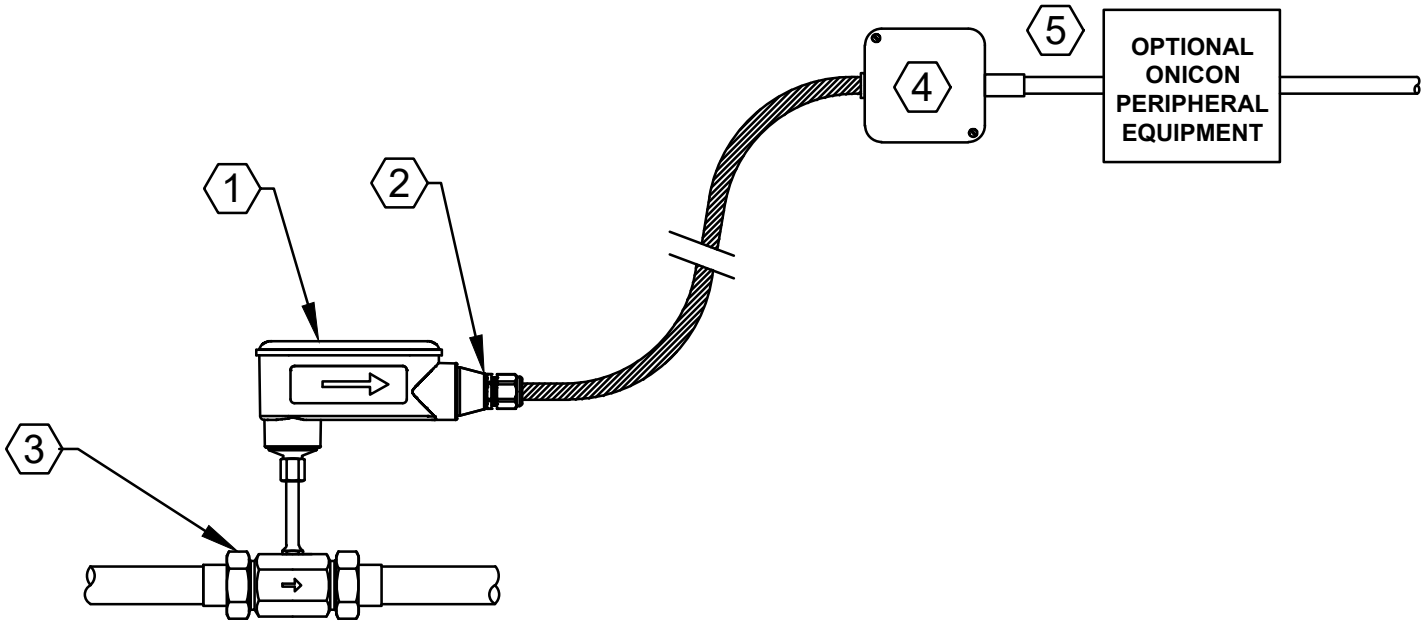

1. Electronics enclosure with flow direction indicator
2. ½" FNPT conduit connection
3. Sweat or NPT process connection
4. Connect factory wires to field wires in appropriate junction box
5. Flow meter output signals provided for connection to control system or ONICON peripheral equipment.

METER ORDERING INFORMATION
F-1000 Meter Model Number Codification = F-1ABB-CC-DD-EFGH-SPC

A = Number of Turbines
1 = Single turbine
2 = Dual turbine

BB = Meter Type
00 = Insertion
34 = ¾″ Inline
01 = 1″ Inline

CC = Outputs
00 = Frequency and scaled pulse (dry contact) output
10 = Frequency, analog and scaled pulse (dry contact) output
11 = Frequency, isolated analog and scaled pulse (dry contact) output

DD = Pipe Size Range
A1 = 1″ - 2.5″ (F-1100 only)
B2 = 1″ - 4.0″ (F-1100 only)
C3 = 2.5″ - 10″
D4 = 2.5″ - 16″
E5 = 2.5″ - 22″
F6 = 2.5″ - 72″
00 = Inline

E = Wetted Adapter Material
1 = Ni plated brass
2 = 316 SS[1]
3 = Bronze body, inline

[1] Required for certain applications and non-metallic pipes.

F = Electronics Enclosure
2 = NEMA 4 weathertight enclosure

G = Wiring Connection
2 = 10′ PVC jacketed cable, pig tail with ½″ conduit adapter
5 = 10′ Plenum rated cable, DIN connector with ½″ conduit adapter
0 = 1′ PVC jacketed cable with Deutsch Connectors

H = Process Adapter
1 = 1″ NPT adapter, medium temperature (temp. ≤ 150°F)
2 = 1″ NPT adapter, high temperature (temp. ≤ 280°F)
3 = 1″ NPT adapter, NSF certified, domestic water (temp. ≤ 200°F)
9 = Inline, coupling adapters based on pipe material

SPC = Special Configurations
503 = Bluetooth interface (For F = 2 only)